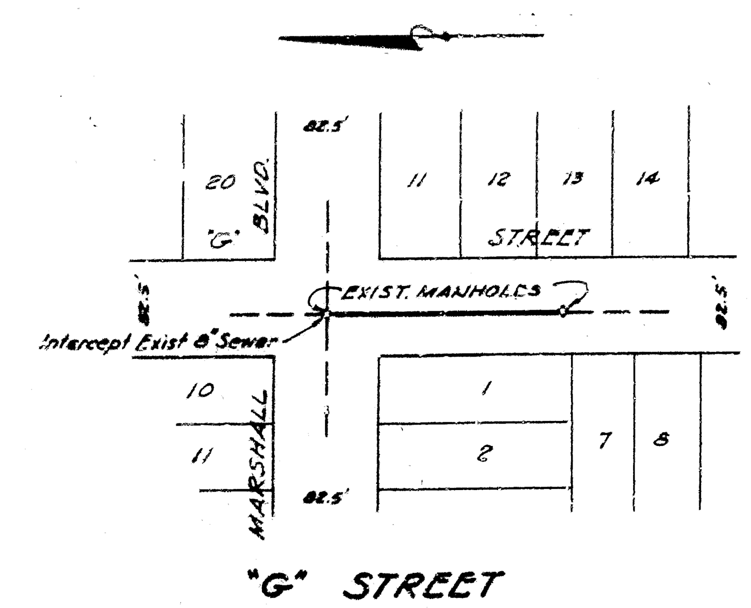

"G" STREET

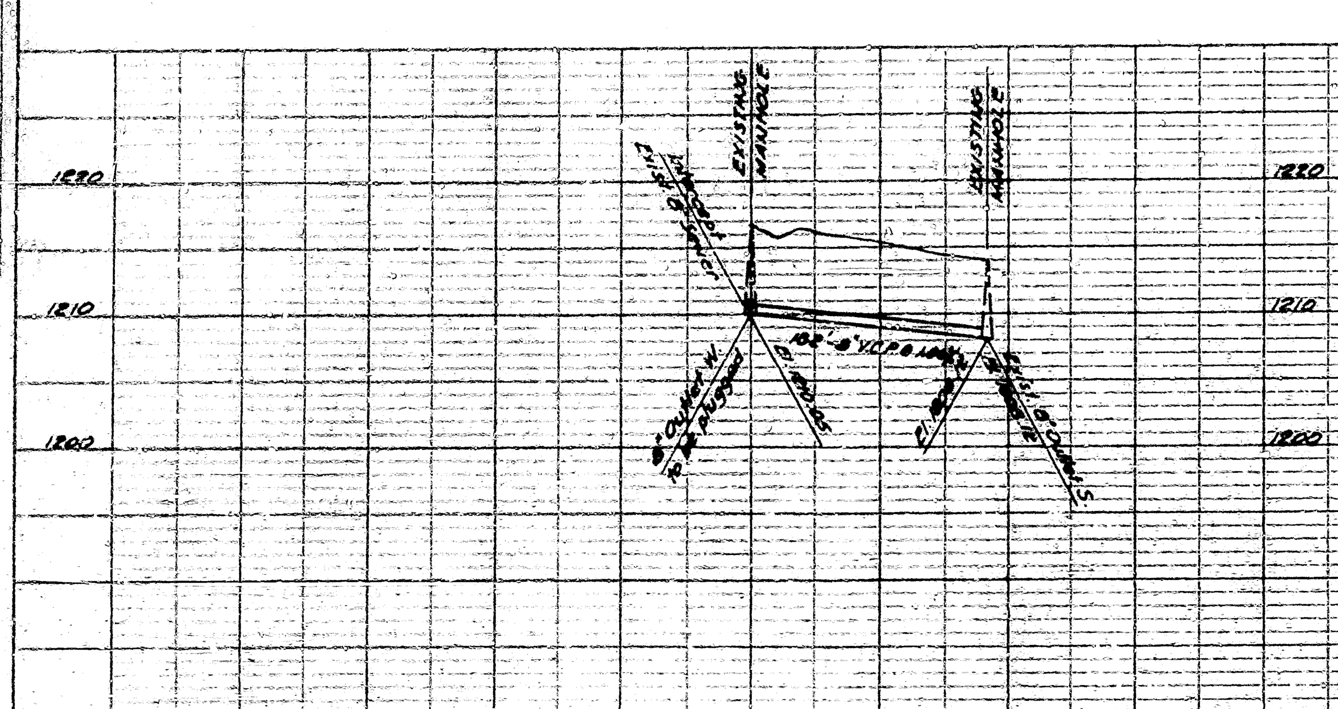

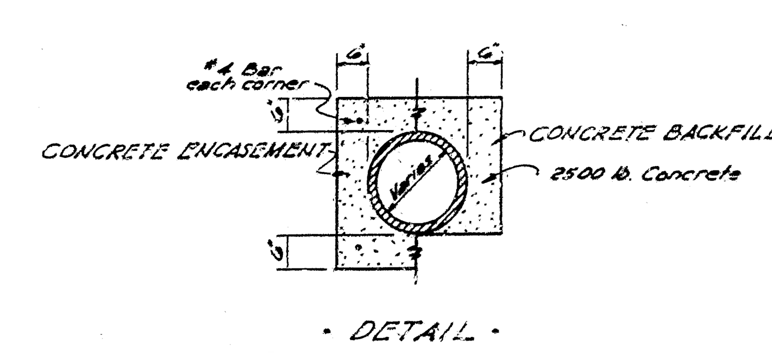

· DETAIL ·

· LEGEND ·

- Plan of Sewer Main.
- Plan of Sewer Manhole.
- Plan of 4" Wye Connection.
- Plan of Sewer Stub or Drop.
- Plan of Existing Sewers.
- Profile of Ground Elevation.
- Profile of Sewer Manhole.
- Profile of Sewer Main.
- El. 70.52 — Elevation of Sewer Invert.
- V.C.P. — Vitrified Clay Pipe.

NOTES:
- See specifications for detail of Manhole.
- Vitrified Clay Pipe 24" & larger to be cement mortar joints.
- Vitrified Clay Pipe 21" & smaller to be poured joints.
- Cement mortar joints shall be 1:3 cement mortar. Caulk with jute as for poured joints. Mortar shall be forced into place & beveled 1:1.
- Where trench excavation is below an existing house connection or other sewers, backfill shall be thoroughly compacted beneath the connection before backfill is placed over it.
- Where connections are made to existing manholes, the invert shall be reconstructed as directed by the Engineer.
- Neither the location, size, type nor depth of pavements, pipe lines, conduits, underground structures, obstructions, etc., are shown on the plans accurately.
- It shall be the duty of the Bidder and/or the Contractor to determine for himself the location, size, type and depths of such utilities, structures and obstructions affecting his work, and the Contractor shall save the City and the Engineer harmless for any costs or damages because of their existence or location.
- Connections to existing manholes or lines, where shown on the plans, shall be made only upon completion and acceptance of the project or when directed by the Engineer.

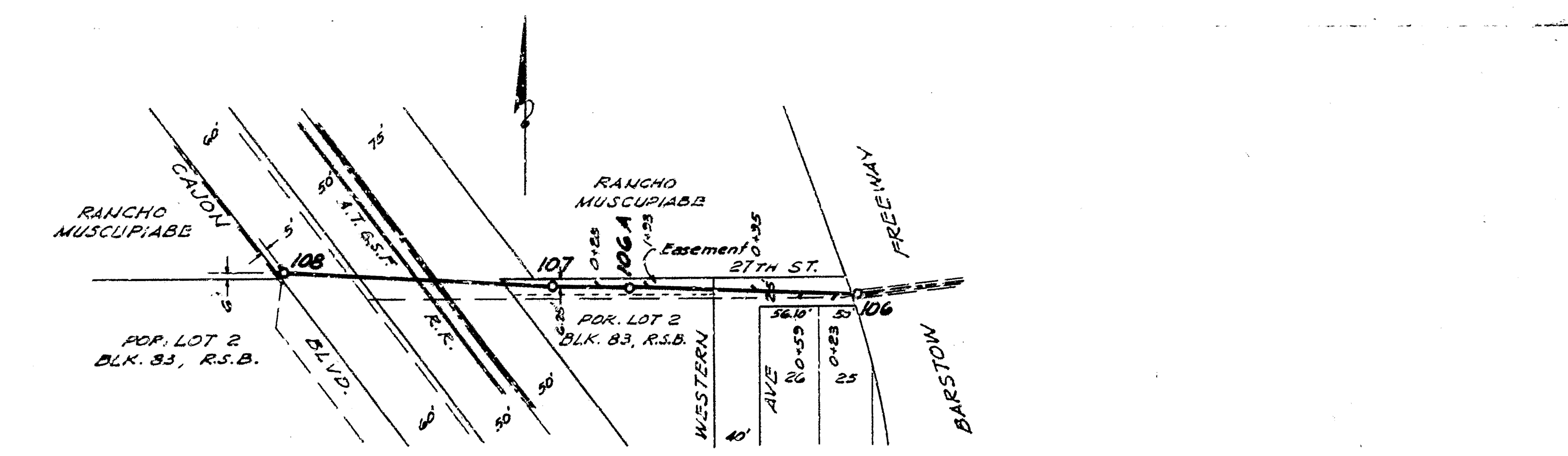

27TH. STREET

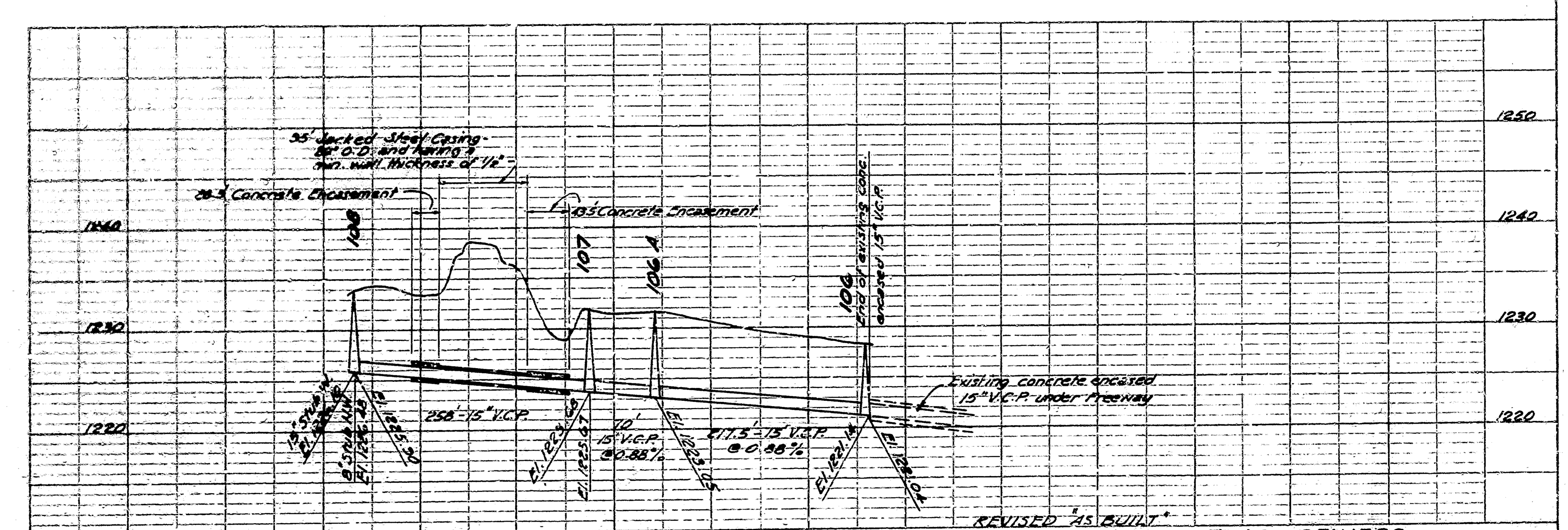

REVISED "AS BUILT"

PLANS & PROFILES - INTERCEPTING SEWERS — SHEET 4

SAN BERNARDINO, CALIFORNIA.

CURRIE ENGINEERING COMPANY.

PLATE 2-PLAN-PROFILE, Q.P.R. & N.Y. STANDARD
KEUFFEL & ESSER CO. NEW YORK
K & E Co. No. 348-20

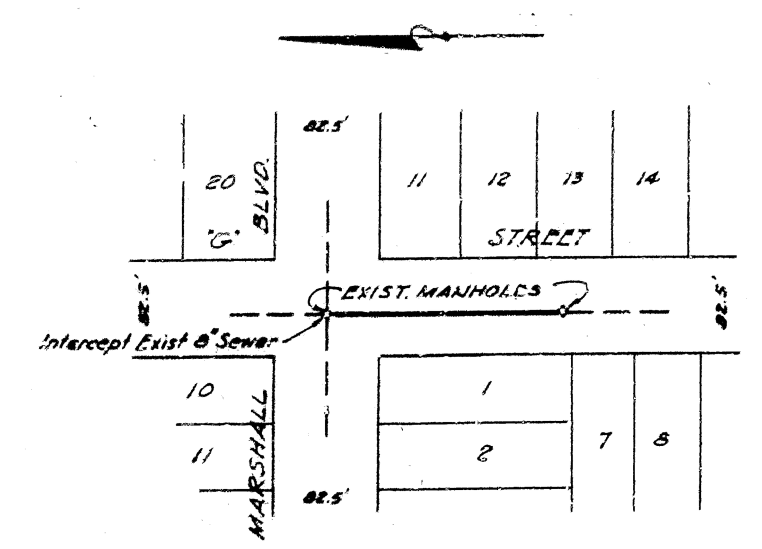

"G" STREET

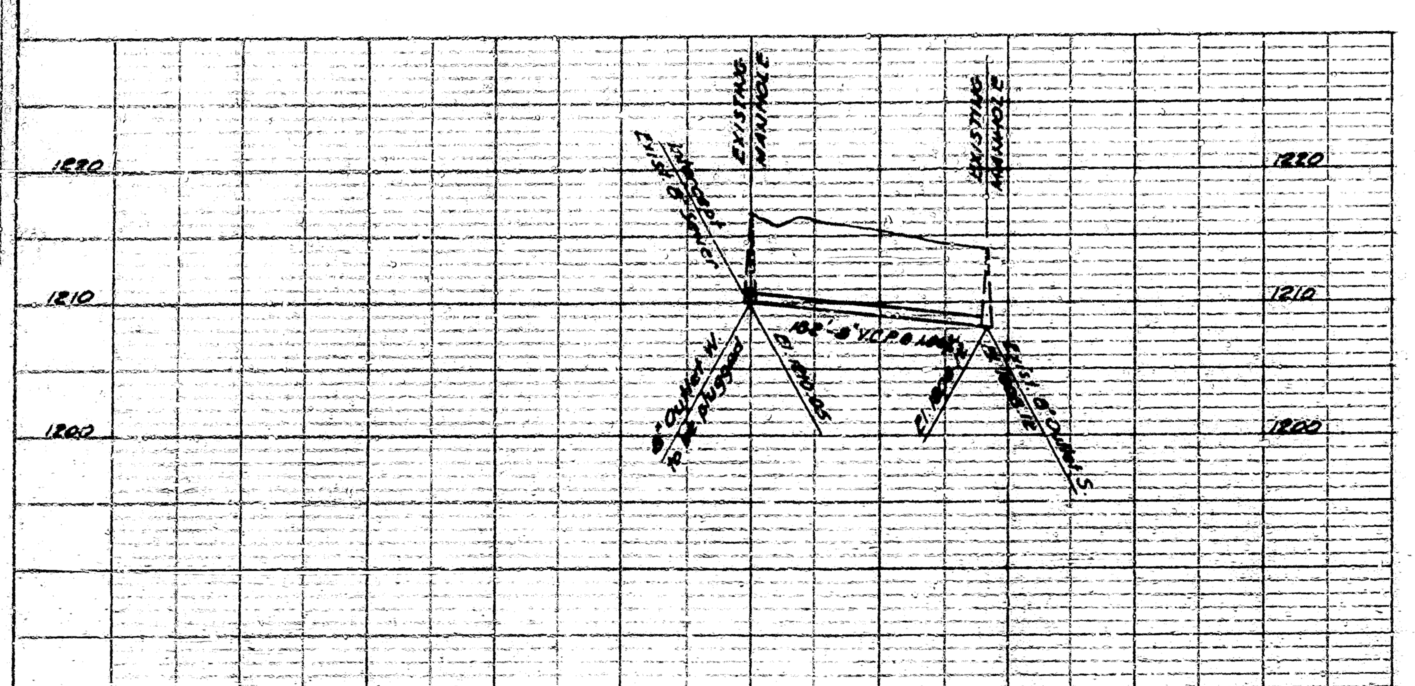

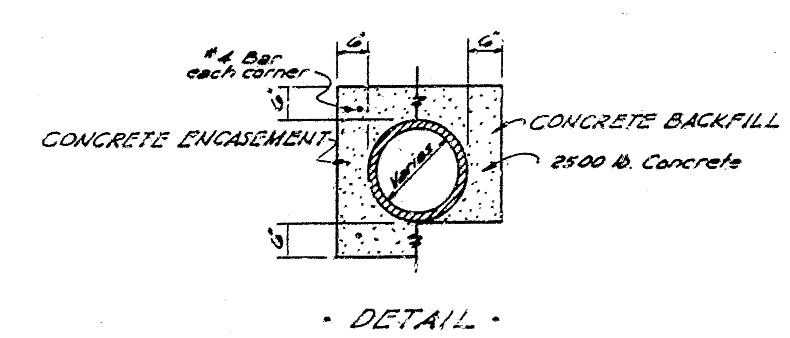

· DETAIL ·

· LEGEND ·

Plan of Sewer Main.
Plan of Sewer Manhole.
Plan of 4" Wye Connection.
Plan of Sewer Stub or Drop.
Plan of Existing Sewers.
Profile of Ground Elevation.
Profile of Sewer Manhole.
Profile of Sewer Main.
El. 70.52 Elevation of Sewer Invert.
V.C.P. Vitrified Clay Pipe.

NOTES:
• See specifications for detail of Manhole.
• Vitrified Clay Pipe 24" & larger to be cement mortar joints.
• Vitrified Clay Pipe 21" & smaller to be poured joints.
• Cement mortar joints shall be 1:3 cement mortar. Caulk with jute as for poured joints. Mortar shall be forced into place & bevelled 1:1.
• Where trench excavation is below an existing house connection or other sewers, backfill shall be thoroughly compacted beneath the connection before backfill is placed over it.
• Where connections are made to existing manholes, the invert shall be reconstructed as directed by the Engineer.
• Neither the location, size, type nor depth of pavements, pipe lines, conduits, underground structures, obstructions, etc., are shown on the plans accurately.
• It shall be the duty of the Bidder and/or the Contractor to determine for himself the location, size, type and depths of such utilities, structures and obstructions affecting his work, and the Contractor shall save the City and the Engineer harmless for any costs or damages because of their existence or location.
• Connections to existing manholes or lines, where shown on the plans, shall be made only upon completion and acceptance of the project or when directed by the Engineer.

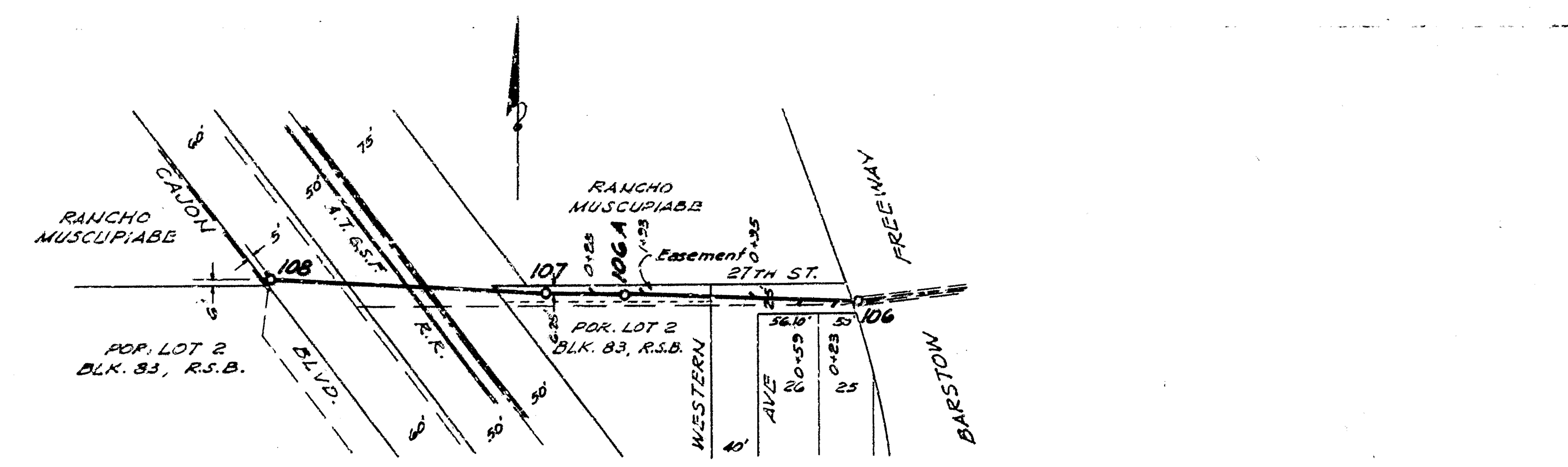

27 TH. STREET

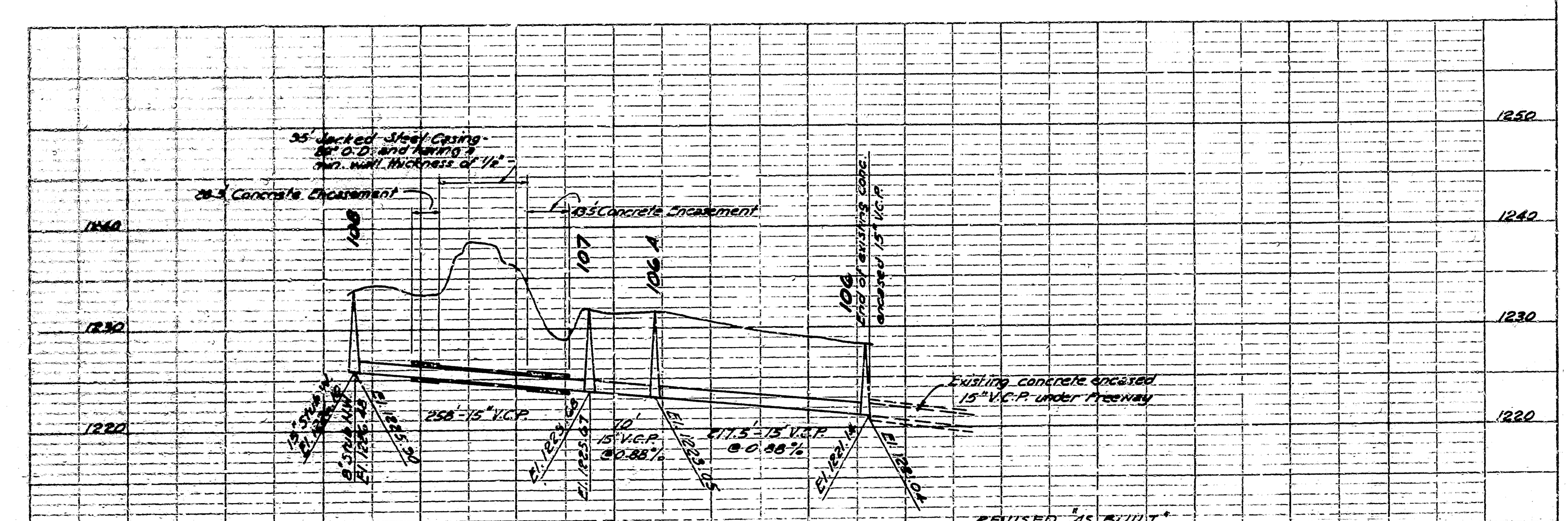

REVISED "AS BUILT"

PLANS & PROFILES - INTERCEPTING SEWERS

SAN BERNARDINO, CALIFORNIA. SHEET 4

CURRIE ENGINEERING COMPANY.

PLATE 2-PLAN-PROFILE
KEUFFEL & ESSER CO. NEW YORK
K & E Co. No. 348-20